NORTHERN LIGHTS RECREATION CO.

# Pool Carton Breakdown – Aruba NB1276

## PR21322400 CHATEAU SAND RESIN 54 2400 SERENADE

**Features:**

Round
Size: 24’
Depth: 54”

Resin top rails and verticals
Wall with protectoloc finish
Resin bottom rails and plates
Slotted tube stabilizers
2 Piece resin top connector

| | Carton Part No. | Carton Description | Carton Qty. |
|---|---|---|---|
| ☐ | **312400694** | 24' CHATEAU SAND RESIN T FRAME PACK | **1** |
| ☐ | **342400758** | 24’ x 54” CHATEAU SAND RESIN BASE PACK | **1** |
| ☐ | **4016733** | CONNECTOR CHATEAU SAND 16 PACK | **1** |

| | Wall Part No. | Wall Description | Carton Qty. |
|---|---|---|---|
| ☐ | **382400387** | 24' x 54” SERENADE 12S 2-1/2R | **1** |

# ARUBA - 24' ROUND

(Manuf. Name: CHATEAU)



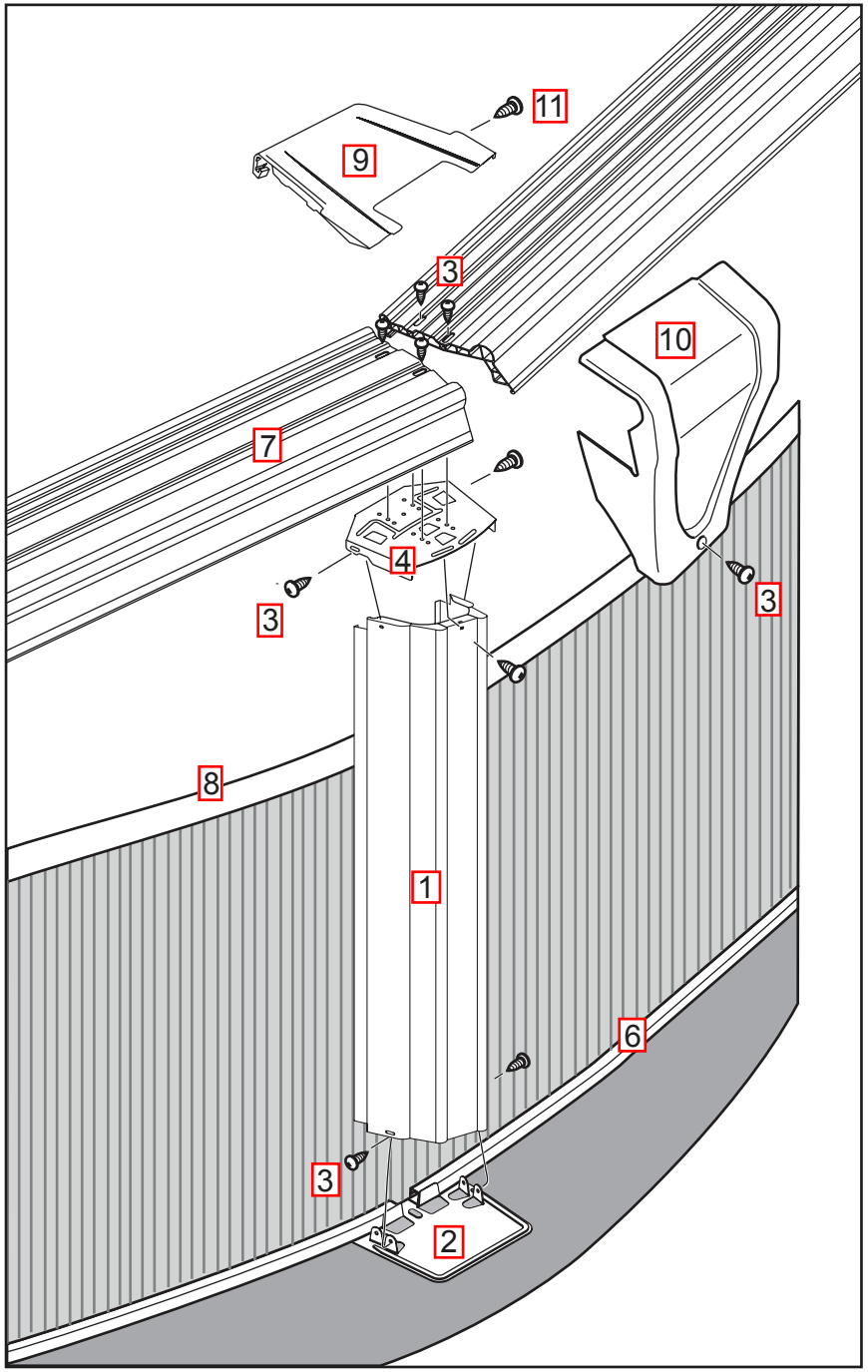


## TOP RAILS - KEY # 7 - *FOUND IN TOP PACK (312400694)*

| Description | Measurements | Sand Resin |
|---|---|---|
| 12' Top Rails | 45-5/8" | 1450670 |
| Common Length Top Rails | 56-29/32" | 1450671 |

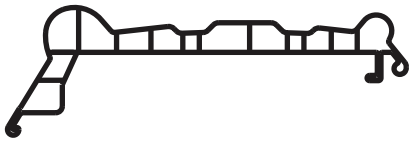

SECTIONAL VIEW

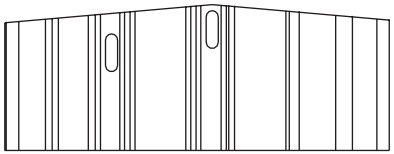

END HOLE PATTERN

## VERTICAL'S - KEY # 1 - *FOUND IN VERTICAL PACK (342400758)*

| Description | Measurements | Sand Resin |
|---|---|---|
| Vertical Upright | 53-1/2" | 1440490 |

SECTIONAL VIEW

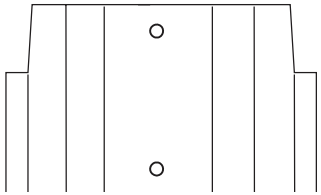

END HOLE PATTERN

## CONNECTORS - *FOUND IN CONNECTOR PACK (4016733)*

| Description | Key # | Sand |
|---|---|---|
| Inner Connector | 9 | 1490451 |
| Outer Connector | 10 | 1490581 |
| Connector Hardware | 11 | 1184232 |

## QUANTITY OF TOP RAILS, VERTICAL'S & CONNECTORS

| 12' | 15' | 18' | 21' | 24' | 27' | 30' |
|---|---|---|---|---|---|---|
| 10 | 10 | 12 | 14 | 16 | 18 | 20 |

# ARUBA - 24' ROUND - Continued



(Manuf. Name: CHATEAU)

## ARUBA (CHATEAU) FRAME COMPONENTS - *FOUND IN BASE PACK (342400758)*

| DESCRIPTION | KEY # | 12' | 15' | 18' | 21' | 24' | 27' | 30' |
|---|---|---|---|---|---|---|---|---|
| Resin Bottom Rail | 6 | 1460181 x 10 | 1460182 x 10 | 1460183 x 12 | 1460184 x 14 | 1460185 x 16 | 1460186 x 18 | 1460187 x 20 |
| Slotted Tube | 8 | 1470096 x 10 | 1470097 x 10 | 1470098 x 12 | 1470099 x 14 | 1470100 x 16 | 1470101 x 18 | 1470102 x 20 |
| Resin Base Plate | 2 | 1320170 x 10 | 1320170 x 10 | 1320170 x 12 | 1320170 x 14 | 1320170 x 16 | 1320170 x 18 | 1320170 x 20 |
| Top Plate | 4 | 1320143 x 10 | 1320143 x 10 | 1320143 x 12 | 1320143 x 14 | 1320143 x 16 | 1320143 x 18 | 1320143 x 20 |
| 6" Slotted Tube Connector | | 1470108 x 10 | 1470108 x 10 | 1470108 x 12 | 1470108 x 14 | 1470108 x 16 | 1470108 x 18 | 1470108 x 20 |
| Chateau Frame Instructions | | 1920683A | 1920683A | 1920683A | 1920683A | 1920683A | 1920683A | 1920683A |
| Round Ground Prep | | 1920283 | 1920283 | 1920283 | 1920283 | 1920283 | 1920283 | 1920283 |
| Hardware Pack (Qty. – 29) | 3 | | | | | 1184298 | | |
| Hardware Pack (Qty. – 59) | 3 | | | | | | 1184299 x 2 | 1184299 |
| Hardware Pack (Qty. – 77) | 3 | 1184300 | 1184300 | 1184300 | | | | 1184300 |
| Hardware Pack (Qty. – 95) | 3 | | | | 1184301 | 1184301 | | |
| Hardware Pack 1" (Qty. – 40) | | | | 1184268 | | 1184268 | | 1184268 |
| Hardware Pack 1" (Qty. – 15) | | 1184269 x 3 | 1184269 x 3 | 1184269 | 1184269 x 4 | 1184269 x 2 | 1184269 x 5 | 1184269 x 3 |

**NOTE: 192063 and 1920283 instruction manuals are found in top rail pack 312400694**

## ARUBA (CHATEAU) COMPONENTS FOUND IN WALL - *(382400387)*

| PART # | DESCRIPTION | 12' | 15' | 18' | 21' | 24' | 27' | 30' A | 30' B |
|---|---|---|---|---|---|---|---|---|---|
| 1382480 | 47" Round Coping | 10 | 12 | 15 | 17 | 19 | 22 | 25 | - |
| 1184341 | 54" Joiner Hardware | 1 | 1 | 1 | 1 | 1 | 1 | 1 | 1 |
| 1920602 | Literature Pack | 1 | 1 | 1 | 1 | 1 | 1 | 1 | - |
| 1182430 | Wall Savor Gasket | 1 | 1 | 1 | 1 | 1 | 1 | 1 | - |